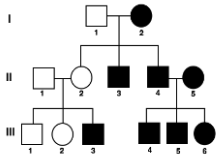

Unit 6 : Human Genetics

Daily Warm Ups

The very first thing that you will do every day when you walk into class is a science warm up. This will usually be a question that will either get you thinking about what we will be learning that day or will help you think about what we learned during the day before. You should first try to answer the question from your own memory and using your own thoughts but, if you are having difficulty, you may look for the answer outside the class (book, internet, etc).

At the end of the week you will hand them in. *This booklet will be glued into your BILL on test day*. You can change your answers at any time prior to when it is graded (in fact, it is **encouraged!** Learning is a process). If you ever miss a day, it is your responsibility to make-up the warm ups for the day you missed.

Warm Up questions are worth 4 points each. I will be looking for any misconceptions you might have, how thoroughly you answer a question, how much you used resources available to you, and even how well a particular Warm Up question is constructed.

Scoring Rubric:

Score			
4	**3**	**2**	**1**
Excellent	**Good**	**Fair**	**Poor**
Correct Answer : Student answers the Warm Up question correctly and completely. Student incorporates information from the text, research, or class notes into the answer.	*Incomplete Answer* : Student shows some accurate prior knowledge and may use correct terminology to answer the Warm Up question. Student does not use appropriate information from the text or lecture notes to answer the question.	*Incorrect Answer* : Student tries to answer the Warm Up question but shows minimal accurate previous knowledge to assist in answering. Student shows significant misconceptions about concepts. Student does not use any information from the text or lecture notes to answer the question.	*No Attempt* : Student says s/he does not know how to answer the Warm Up question.

Date _____

Concept covered: Inheriting a Genetic Disorder

A couple who are in good health have a baby and are shocked to find that he has cystic fibrosis, an inherited disease. How did the child inherit a life-threatening disease from healthy people (assume this was not a spontaneous mutation). Why weren't the parents affected by cystic fibrosis?

Can this couple give birth to a child without cystic fibrosis? Why or why not?

Date _____

Concept Covered: X-inactivation

https://www.hhmi.org/biointeractive/x-inactivation

1. What are the sex chromosomes of a male human? _____
2. What are the sex chromosomes of a female human? _____
3. In your own words, describe what X-inactivation is: _____
_____
_____

4. Sex-linked genes, like colorblindness, are found on the X chromosome. What would be the effect of X-inactivation on a woman heterozygous for colorblindness?
_____
_____
_____

Date _____

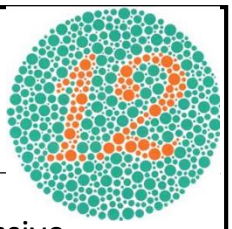

Concept Covered: X-linked Traits

The trait for red-green colorblindness is located on the X chromosome and is recessive.

1. Show the Punnett square for the cross between a heterozygous female and a normal vision man.

Genotype of female: _____

Genotype of male: _____

2. How can we get a female that is colorblind? What genotypes would her parents have to be for this to happen? _____

_____

Date _____

Concept Covered: Pedigrees

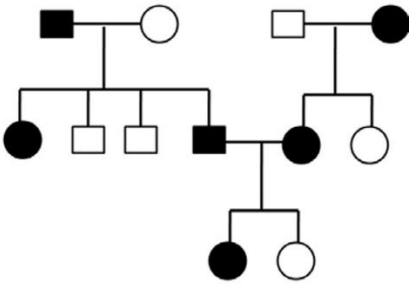

A.

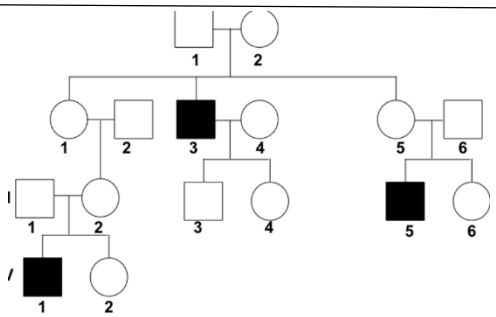

B.

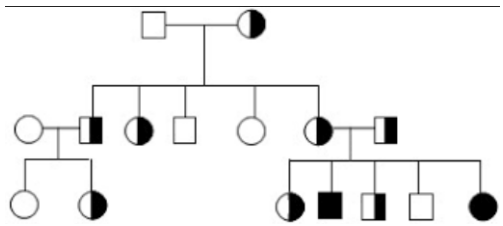

C.

1. How many generations are in pedigree B? _____

2. How many males are in pedigree A? _____

3. What does the ½ colored symbol seen in C mean? _____

4. How many marriages are there in pedigree B? _____

Date _____

Concept Covered: Pedigrees 2

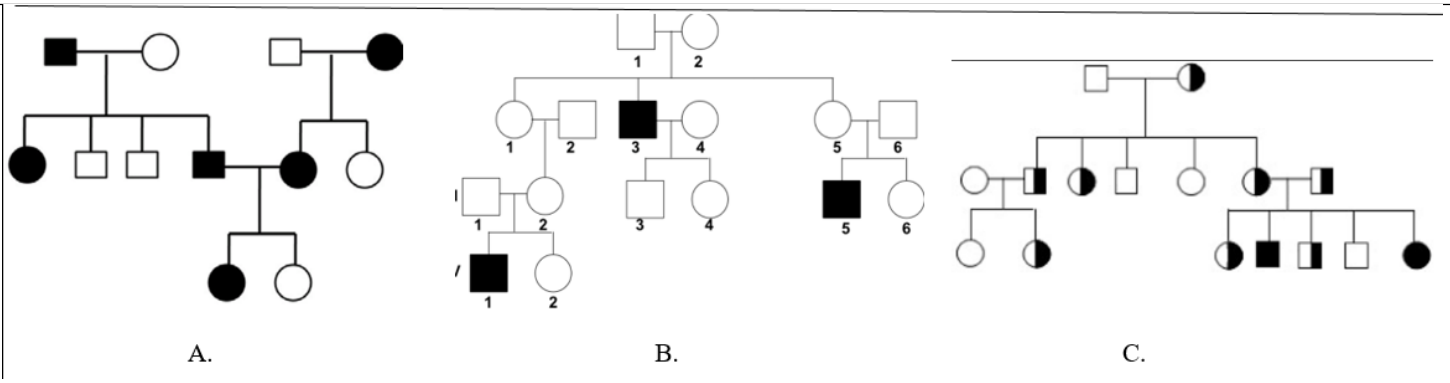

1. Which of the 3 pedigrees shows how a sex-linked, recessive trait is passed down in a family? _____

2. Which of the 3 pedigrees shows how an autosomal dominant trait is inherited in a family? _____

3. How many children did the couple in generation I of pedigree C have? _____

4. In pedigree C, circle individual III-2.

Date _____

Concept Covered: Genetic Disorders

Match the disorder in A-D to the inheritance pattern in #1-4.

A. Albinism B. Hemophilia C. Huntington's disease D. Down Syndrome

1. Autosomal Dominant _____
2. Sex-linked recessive _____
3. Autosomal recessive _____
4. Not genetic, caused by nondisjunction during meiosis _____

Date _____

Concept Covered: Multiple Alleles

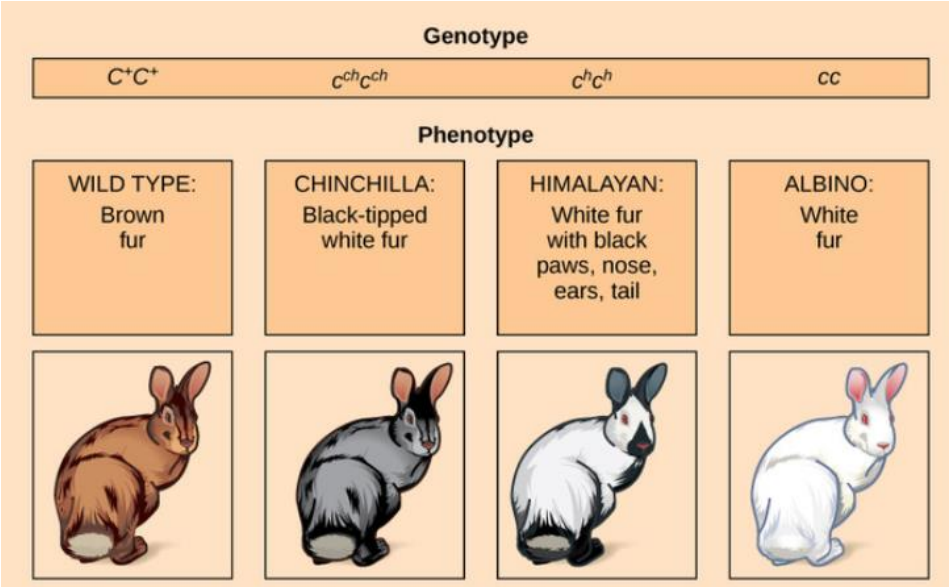

1. Using the information in the image above, what are the 4 **ALLELES** for rabbit fur color?

   _____ _____ _____ _____

2. If a rabbit has the genotype C^+c^h, what color will it be? _____

3. What are the 3 alleles for blood type: _____ _____ _____

Date _____

Concept Covered: Codominance

1. Checkered chickens, like in the image above, are the result of a black-feathered parent and a white-feathered parent in certain types of chickens. If a checkered hen was mated with a white rooster, how many chicks from a clutch of 10 could the breeder expect to also be checkered?

_____

2. If Matilda has blood type AB, what is her genotype? _____

Date _____

Concept Covered: Blood Typing

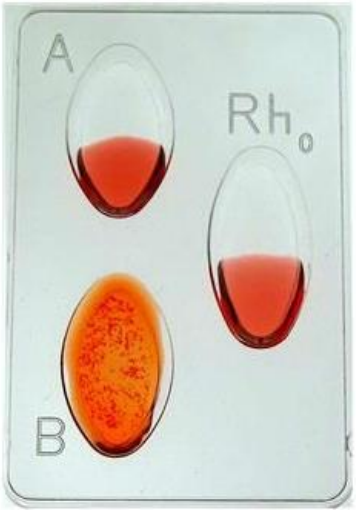

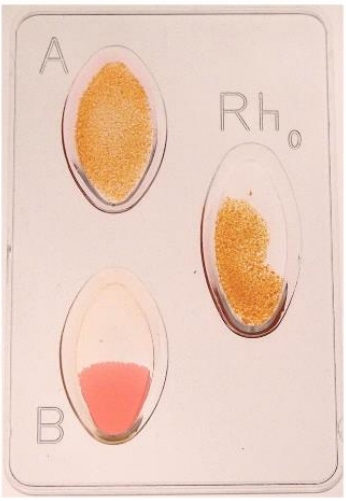

1. Blood type _____
2. Blood type _____
3. Blood type _____

4. blood type of the universal donor = _____

Date _____

Concept Covered: Blood Type

Allison is driving with her parents, Kate and Bob, when they get in a serious car accident. At the emergency room, her doctor tells Allison that her mother is fine, but her father has lost a lot of blood and will need a blood transfusion. Allison volunteers to donate blood, and you tell her that her blood type is AB. Bob is type O.

(1) Can Allison donate blood to Bob? Why or why not? _____

_____

(2) Allison, who is a biology student, begins to wonder if she is adopted. What would you tell her and why?_____

_____

Date _____

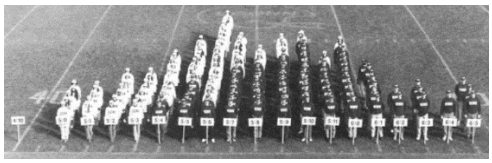

Concept Covered: Polygenic Traits

1. In terms of phenotype ratios, how do polygenic traits differ from trait inherited by simple dominance? _____

_____

2. Skin color in humans is governed by at least 378 different genes. Let's pretend, for simplicity that it is 6 genes. If 2 parents with light brown skin each have this genotype MmMmmm, how is it possible that they have a child with dark brown skin? _____

_____

_____

3. Is it possible that these parents have a child with white skin? Explain _____

_____

Date _____

Concept Covered: Incomplete Dominance

1. Two snapdragon plants are cross-pollinated. The resulting seeds grew into plants that have pink, red, and white flowers. What are the genotypes of the parents? _____

2. What color are the parents? _____

3. If 120 seeds are produced, how many of them should grow into white-flowering plants? Do the Punnett square to help you if you need to. _____

Date _____

Concept Covered: Epigenetics

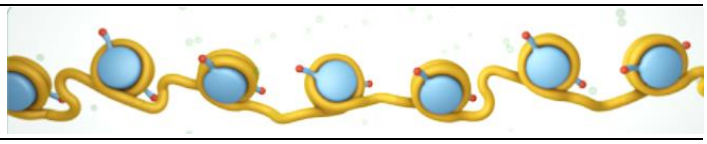

1. Our DNA is wrapped around proteins called _____.

2. Some genes in certain cancer cells look like the image directly above, while normal cell genes often look like the image at the top of the page. This means that cancer cells have certain genes that are turned "off" and can't be copied. Predict what genes might be turned off in cancer genes – remember our lessons on cancer and the cell cycle for semester 1.

_____

_____

Date _____

Concept Covered: Epistasis

When a person is an 'albino', they have very pale (almost white) skin, hair, and eye color. Yet, skin color, eye color, and hair color are controlled by 3 different genes. How do you think a single mutation in a person can cause all three of these traits to be affected? _____

_____

_____

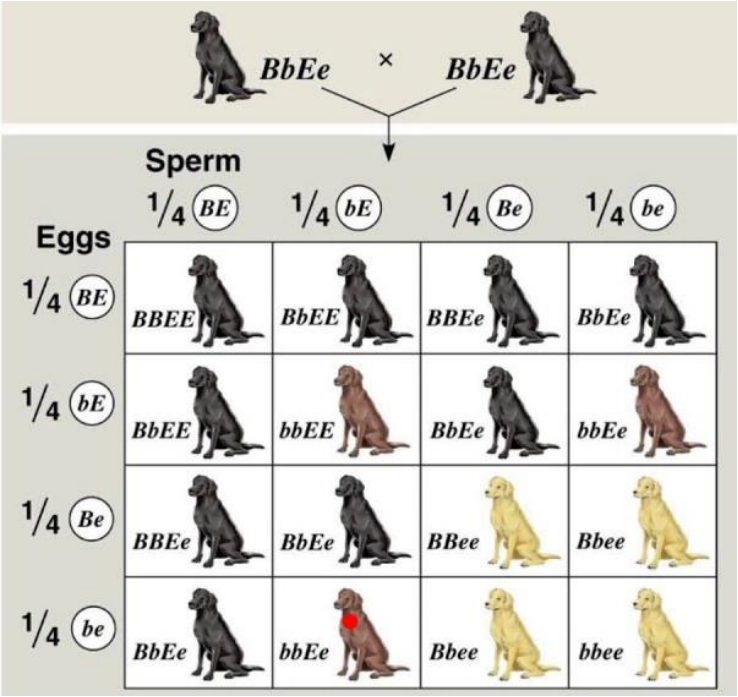

2. Study the Punnett square at the left. What do you think the gene E does?

_____

_____

_____

Date _____

Concept Covered: Sickle Cell Trait

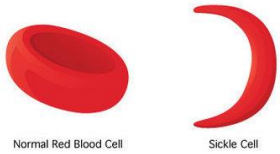

1. What are symptoms of sickle cell disease? _____

_____

2. Someone heterozygous for sickle cell trait has a protective advantage from what other deadly disease? _____

3. Ryan Clark, former NFL player, was a carrier of sickle cell. Although considered "normal phenotype" and not having sickle cell disease, he had a serious sickle cell crisis while playing in Denver, nearly died and lost his spleen. How can you explain this? _____

_____

_____

Date _____

Concept Covered:

Date _____

Concept Covered: